COMPETITION GRADE HIGH PERFORMANCE RADIO CONTROL RACING CAR CHASSIS KIT

WILDFIRE D06

1/10 4WD ELECTRIC COMPETITION TOURING CAR KIT

SETUP SHEET

vbc racing

DRIVER Chris Hillier DATE 12/15/2013

TRACK NAME 5280 Raceway RESULT

COMPOSITION Carpet (INDOOR/OUTDOOR) BEST LAP 10.9

HUMIDITY Low TRACK TEMP

GRIP HI MEDIUM LOW SURFACE SMOOTH BUMPY

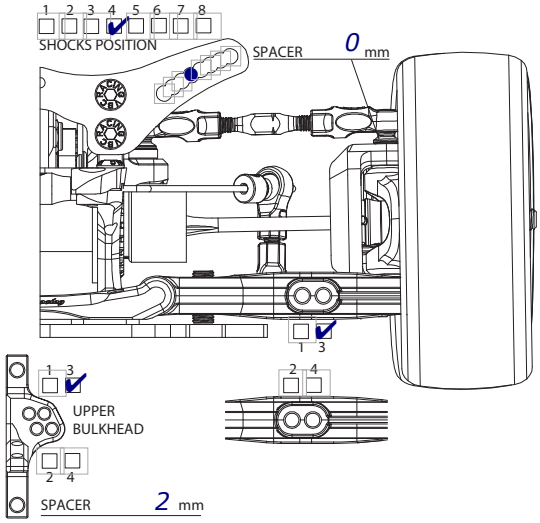

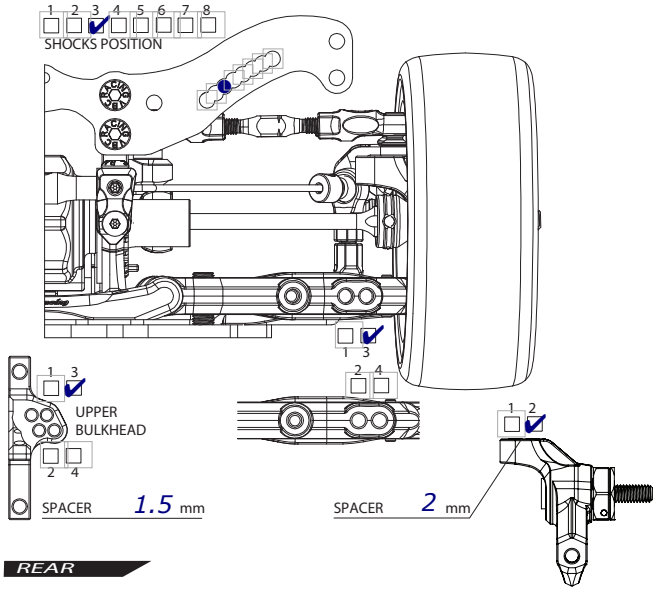

FRONT

GROUND CLEARANCE 5 mm mm DROOP Just under 2 mm ORH

CAMBER ANGLE 1 ° TOE ANGLE 0 °

CASTER BLOCK 4 ° FRONT DRIVE DIFF (OIL) / DIRECT

STABILIZER 1.2 1.3 WHEEL SPACER 0 mm

SUSPENSION SHIM (FF) .5 mm SUSPENSION SHIM (FR) .5 mm

SUSPENSION MOUNT (FF) F05 SUSPENSION MOUNT (FR) C0

WHEELBASE FRONT 3 mm REAR 1 mm BELT TENSION 2 notches tighter than stock, d.

AXLE TYPE / SIZE TWO PIECE JOINT / SINGLE JOINT (STEEL/ALUM) stock mm

REAR

GROUND CLEARANCE 5.2 mm mm DROOP 3 mm ORH

CAMBER ANGLE 2 ° TOE ANGLE 3.5 °

REAR DRIVE DIFF (OIL 3k cst) DRIVE CUP ALUMINUM/STEEL

STABILIZER 1.2 1.3 1.4 WHEEL SPACER 0 mm

SUSPENSION SHIM (RF) 1 mm SUSPENSION SHIM (RR) 1 mm

SUSPENSION MOUNT (RF) C05 SUSPENSION MOUNT (RR) E30

WHEELBASE FRONT 3 mm REAR 1 mm BELT TENSION stock, diff high

AXLE TYPE / SIZE TWO PIECE JOINT / SINGLE JOINT (STEEL/ALUM) stock mm

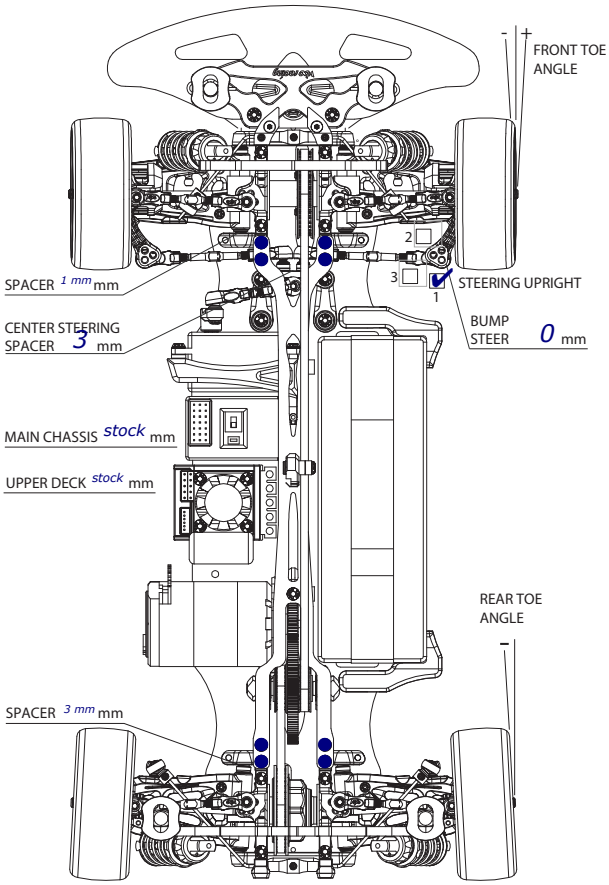

FRONT

SHOCK LENGTH 9.5 mm

PISTON 4 holes / OTHERS VBC

OIL AE 35 (425 cst)

SPRING VBC Orange

OIL SEALER CAP S / MS / M / H

REBOUND 20 %

NOTES

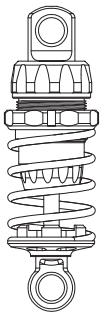

REAR

SHOCK LENGTH 9.5 mm

PISTON 4 holes / OTHERS VBC

OIL AE 32.5 (388 cst)

SPRING VBC Red

OIL SEALER CAP S / MS / M / H

REBOUND 20 %

NOTES

MOTOR Reedy 5.5 SPUR stock T PINION 29 T PITCH 64

TIRE Sweep QTS32 TIRE INSERT WHEEL

TIRE ADDICTIVE SXT TIME 8 minutes TIRE WARMER no

ESC LRP Flow ESC SETTING

BATTERY BODY PF Mazda GX REAR WING PF stiff wing, high downforce

REMARKS

Top-deck screw by motor mount is removed.
Mazda GX body mounted forward by 3-4 mm.
SXT applied to full front and full rear.

Arn0 - v1.1

www.petitrc.com