COMPETITION GRADE HIGH PERFORMANCE RADIO CONTROL RACING CAR CHASSIS KIT

# WILDFIRE D06

1/10 4WD ELECTRIC COMPETITION TOURING CAR KIT

## SETUP SHEET

vbc racing

DRIVER Lucas Urbain DATE 3/11/2013

TRACK NAME ETS Rd1 Hrotovice RESULT 26th

COMPOSITION Carpet (INDOOR/OUTDOOR) BEST LAP 12.1

HUMIDITY TRACK TEMP

GRIP ✔ MEDIUM LOW SURFACE SMOOTH BUMPY

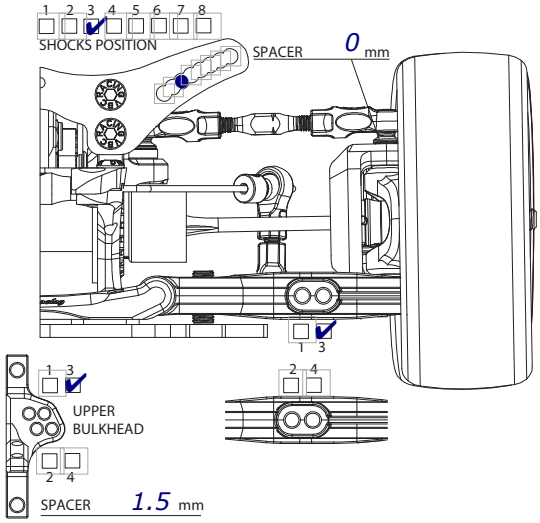


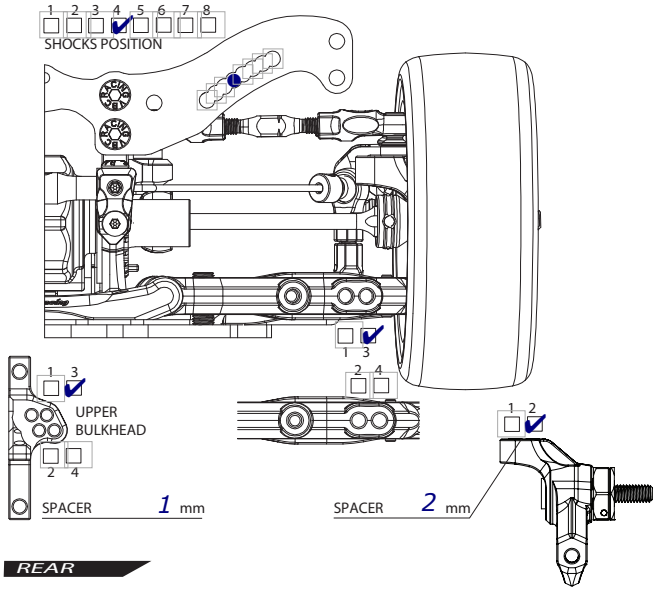


### FRONT

GROUND CLEARANCE 5.1 mm DROOP 5.5 under arm

CAMBER ANGLE 1 ° TOE ANGLE 2.5 °

CASTER BLOCK 4 ° FRONT DRIVE DIFF (OIL ) / DIRECT

STABILIZER 1.2 1.3 WHEEL SPACER 0 mm

SUSPENSION SHIM (FF) 1 mm SUSPENSION SHIM (FR) 1 mm

SUSPENSION MOUNT (FF) F00 SUSPENSION MOUNT (FR) -C10

WHEELBASE FRONT 3 REAR 1 BELT TENSION

AXLE TYPE / SIZE TWO PIECE JOINT / SINGLE JOINT (STEEL/ALUM) mm

### REAR

GROUND CLEARANCE 5.4 mm DROOP 1 under hub

CAMBER ANGLE 1.5 ° TOE ANGLE 3 °

REAR DRIVE DIFF (OIL 5000 ) DRIVE CUP ALUMINUM/STEEL

STABILIZER 1.2 1.3 WHEEL SPACER 0 mm

SUSPENSION SHIM (RF) 1 mm SUSPENSION SHIM (RR) 1 mm

SUSPENSION MOUNT (RF) -C15 SUSPENSION MOUNT (RR) E15

WHEELBASE FRONT 3 REAR 1 BELT TENSION

AXLE TYPE / SIZE TWO PIECE JOINT / SINGLE JOINT (STEEL/ALUM) 49 mm

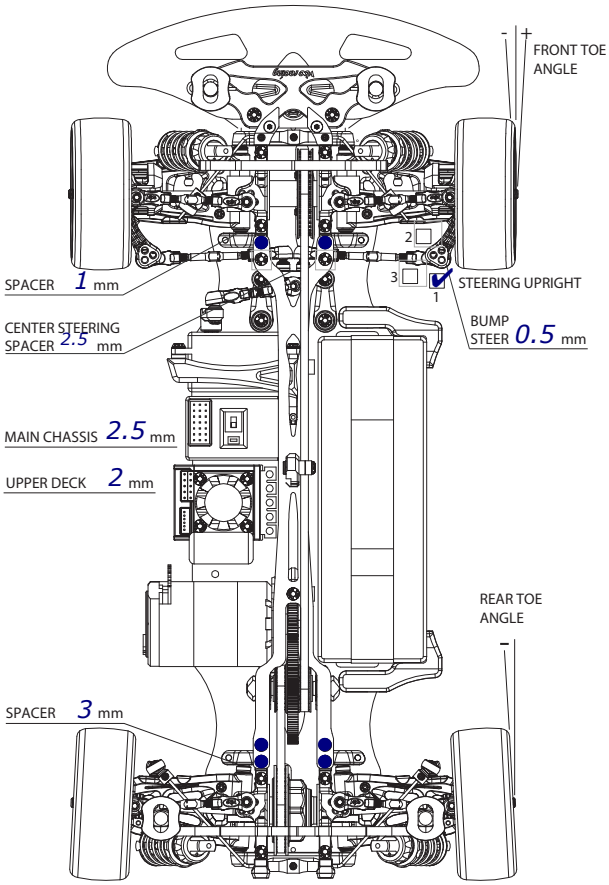


### FRONT

SHOCK LENGTH 59 mm

PISTON 4 holes / OTHERS 1.1mm

OIL MR33 350

SPRING Yokomo Pink

OIL SEALER CAP S / MS / H

REBOUND 50 %

NOTES

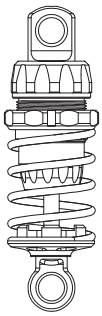

### REAR

SHOCK LENGTH 59 mm

PISTON 4 holes / OTHERS 1.1mm

OIL MR33 400

SPRING Yokomo Blue

OIL SEALER CAP S / MS / H

REBOUND 50 %

NOTES

MOTOR MM Fleta ZX 5.0 SPUR 116 T PINION 28 T PITCH 64

TIRE RIDE Rex 30 TIRE INSERT WHEEL

TIRE ADDICTIVE Handout CS TIME 5min TIRE WARMER

ESC MM Fleta Pro ESC SETTING

BATTERY Silverback Venus BODY PF MazdaSpeed6 REAR WING Roche

REMARKS

Glued front sidewalls
Cut steering blocks for more lock

Arn0 - v1.1

www.petitrc.com