COMPETITION GRADE HIGH PERFORMANCE RADIO CONTROL RACING CAR CHASSIS KIT

WILDFIRE D07

1/10 4WD ELECTRIC COMPETITION TOURING CAR KIT

SETUP SHEET

Arn0

vbc racing

DRIVER George Andreadakis DATE 7/6/2015

TRACK FRT ATHENS RESULT 7TH

ASPHALT / CARPET INDOOR / OUTDOOR BEST LAP 18.396

HUMIDITY 30% TRACK TEMP 33 AIR TEMP 25

GRIP LOW MEDIUM HIGH SURFACE BUMPY MEDIUM SMOOTH

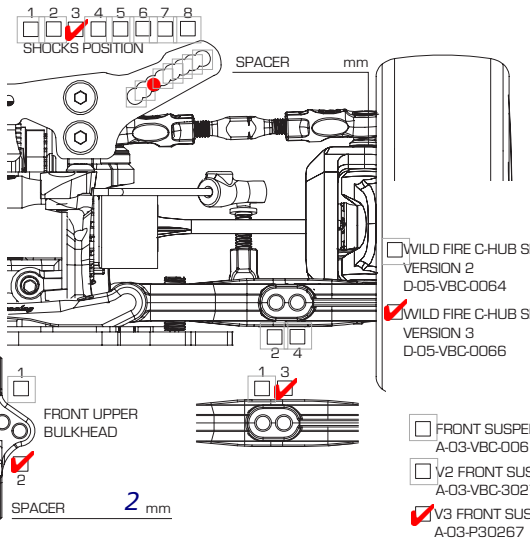

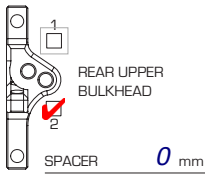

REAR UPPER BULKHEAD

SPACER 0 mm

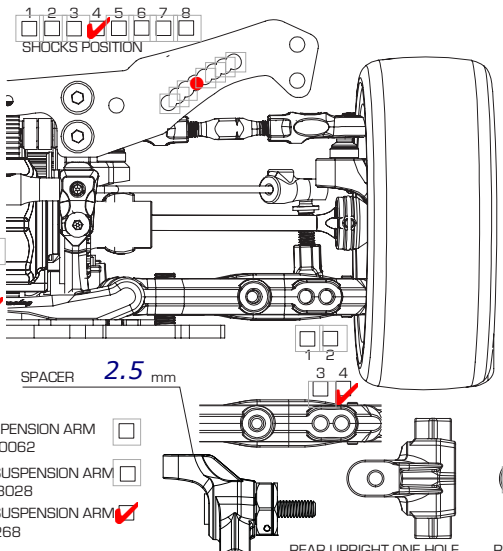

SPACER 2.5 mm

WILD FIRE C-HUB SET VERSION 2 D-05-VBC-0064

WILD FIRE C-HUB SET VERSION 3 D-05-VBC-0066

SOFT — HARD

STEERING BLOCK V2 A-03-VBC-0079

STEERING BLOCK V3 A-03-P30269

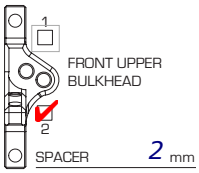

FRONT UPPER BULKHEAD

SPACER 2 mm

FRONT SUSPENSION ARM A-03-VBC-0061

V2 FRONT SUSPENSION ARM A-03-VBC-3027

V3 FRONT SUSPENSION ARM A-03-P30267

SOFT — HARD

REAR SUSPENSION ARM A-03-VBC-0062

V2 REAR SUSPENSION ARM A-03-VBC-3028

V3 REAR SUSPENSION ARM A-03-P30268

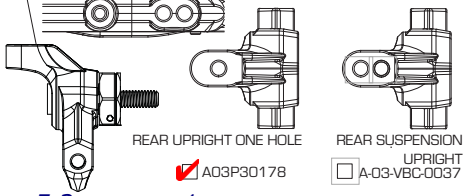

REAR UPRIGHT ONE HOLE A03P30178

REAR SUSPENSION UPRIGHT A-03-VBC-0037

Front

GROUND CLEARANCE 5 mm DROOP 5.4 mm

CAMBER ANGLE 1.5 ° TOE ANGLE 1 °

CASTER ANGLE 4 ° FRONT DRIVE DIFF (OIL) / DIRECT

STABILIZER 1.2 3 1.4 WHEEL SPACER mm

SUSPENSION SHIM (FF) 0 mm SUSPENSION SHIM (FR) 0.5 mm

SUSPENSION MOUNT (FF) F00 SUSPENSION MOUNT (FR) -C05

AXLE TYPE / SIZE TWO-PIECE JOINT / SINGLE JOINT (STEEL / ALUM) 52 mm

Rear

GROUND CLEARANCE 5.2 mm DROOP 1 mm

CAMBER ANGLE 2 ° TOE ANGLE 3 °

REAR DRIVE DIFF (OIL 5000) DRIVE CUP ALUMINUM / STEEL

STABILIZER 1.2 3 1.4 WHEEL SPACER mm

SUSPENSION SHIM (FF) 0 mm SUSPENSION SHIM (FR) 0 mm

SUSPENSION MOUNT (FF) C0 SUSPENSION MOUNT (FR) E30

AXLE TYPE / SIZE TWO-PIECE JOINT / SINGLE JOINT (STEEL / ALUM) 49 mm

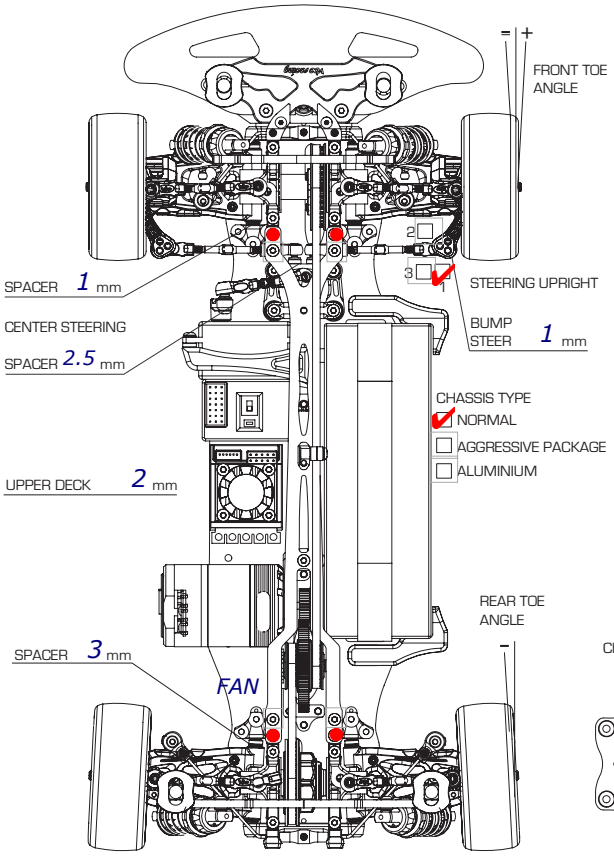

CHASSIS TYPE

NORMAL

AGGRESSIVE PACKAGE

ALUMINIUM

Front

SHOCK LENGTH 10.8 mm

PISTON 4 hole(s) / OTHERS

OIL 500

SPRING WHITE

OIL SEALER CAP S / MS / M / H

REBOUND 15 %

NOTES

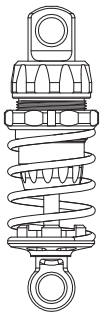

Rear

SHOCK LENGTH 10.8 mm

PISTON 4 hole(s) / OTHERS

OIL 500

SPRING RED

OIL SEALER CAP S / MS / M / H

REBOUND 5 %

NOTES

MOTOR GFORCE 4.5T SPUR 116 T PITCH 64 PINION 28 T

TIRE LRP TIRE INSERT WHEEL

TIRE ADDITIVE BODY LTCR LIGHT REAR WING PROTOFORM

ESC GFORCE TS160 BATTERY 6800

REMARKS

Chassis Flex Setting (Fill in the Circle)

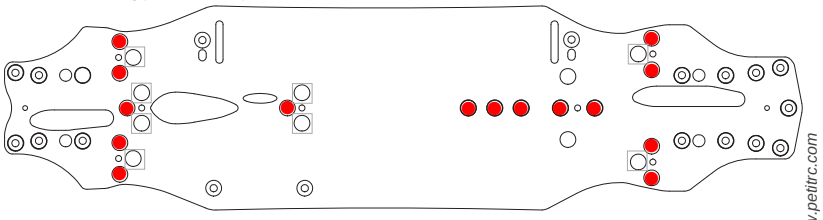

www.petitrc.com