TEAM LOSI RACING

22 TWENTY TWO

Name: Paul Upton | Date: | Event:

City: | State: | Track: Torch and Stotfold

Track Conditions: ☐ Indoor ☑ Outdoor | ☐ Tight ☐ Open | ☐ Smooth ☐ Rough | ☐ Hard Packed ☐ Loose/Loamy | ☐ Blue Groove ☐ Dry | ☐ Wet ☐ Dusty | ☐ Grass ☑ Astro Turf | ☐ Low Bite ☐ Med Bite | ☐ High Bite ☐ Other

Front Suspension

Toe: 0°

Ride Height: Wishbones slightly above level

Camber: -2°

Caster: ☐ 0° ☐ 3° ☐ 5° ☑ 10°

Kick Angle: ☑ 20° ☐ 25° ☐ 30°

Sway Bar: No

Oil: 27.5w Losi (going to try 30w Losi oil)

Piston: 6 holes 1.3mm tapered

Spring: Green

Spindle Type: ☐ Inline ☑ Trailing

Shock Limiters: 2mm

Shock Location: 2 - Middle

Bump Steer: 0mm

Camber Link: 1

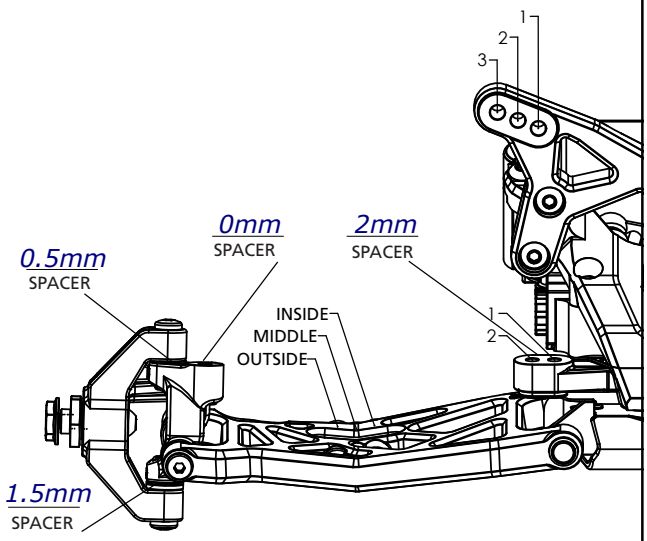

Notes:

Rear Suspension

Chassis Configuration: ☐ Rear Motor ☑ Mid Motor

Toe: 4°

Anti-Squat: 1°

Roll Center: ☐ Low Roll Center (LRC) ☑ High Roll Center (HRC)

Ride Height: Driveshafts level

Camber: -3°

Rear Hub Spacing: Long

Hex Width: Kit

Sway Bar: No

Oil: 30wt Losi (going to try 35w Losi w Red spring)

Piston: 6 holes 1.3mm tapered

Spring: Orange (going to try Red spring w 35w)

Shock Limiters: 0mm

Camber Link: 1 - B

Shock Locations: 2 - Inside

Wing/Wickerbill: Kit

Battery Position:

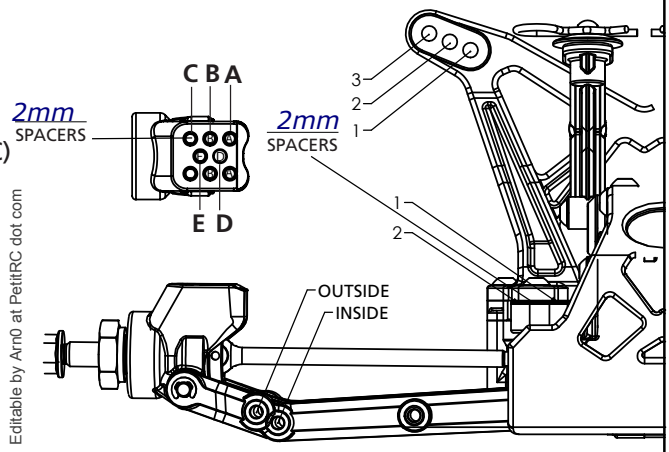

Editable by Arn0 at PetitRC dot com

Electronics

Radio: Ko Propo

Servo: Savox slim

ESC: Speed Passion

Initial Brake: -

Drag Brake: -

Throttle Profile: -

Timing Advance: -

Throttle/Brake Expo: -

Servo Expo: -

Throttle/Brake EPA: -

Motor: Ocra 5.5T

Pinion: 18 Spur: 76

Battery: Losi 96mm

Weight Placement (Mark with "X")

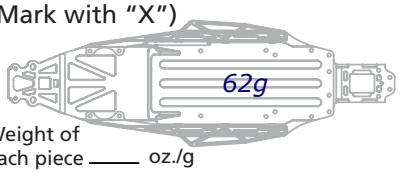

Weight of each piece ____ oz./g

Tires	Compound	Insert	Additive
Front:	Schumacher Staggers		
Rear:	Schumacher Mini Spike Yellow	Medium	

Notes: just think it needs a bit more weight in it