TEAM LOSI RACING

TWENTY TWO

Name: *Wesley Van Helmond* | Date: *28-6-2013* | Event: *GP*

City: *Kampenhout* | State: | Track: *Kampenhout*

Track Conditions: ☐ Indoor ☑ Outdoor | ☑ Tight ☑ Open | ☐ Smooth ☐ Rough | ☐ Hard Packed ☐ Loose/Loamy | ☐ Blue Groove ☑ Dry | ☑ Wet ☐ Dusty | ☐ Grass ☑ Astro Turf | ☐ Low Bite ☑ Med Bite | ☑ High Bite ☐ Other *dry after wet*

Front Suspension

Toe: *0°*

Ride Height: *20mm*

Camber: *-1°*

Caster: ☐ 0° ☐ 3° ☑ 5° ☐ 10°

Kick Angle: ☐ 20° ☑ 25° ☐ 30°

Sway Bar: *no*

Oil: *30*

Piston: *6x56*

Spring: *blue (green when wet)*

Spindle Type: ☐ Inline ☑ Trailing

Shock Limiters: *0*

Shock Location: *2 - middle*

Bump Steer: *0*

Camber Link: *1*

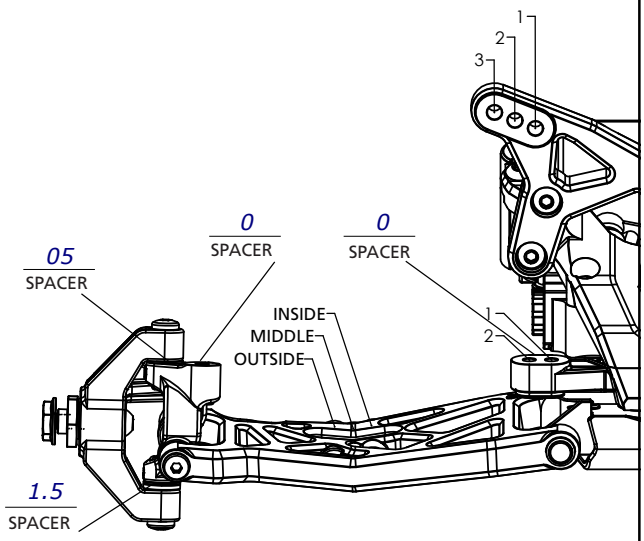

Notes: *tq and win very easy to drive setup*

Rear Suspension

Chassis Configuration: ☐ Rear Motor ☑ Mid Motor

Toe: *4°*

Anti-Squat: *1°*

Roll Center: ☑ Low Roll Center (LRC) ☐ High Roll Center (HRC)

Ride Height: *19mm*

Camber: *-1°*

Rear Hub Spacing: *mid*

Hex Width: *+0.75*

Sway Bar: *no*

Oil: *35*

Piston: *6x55*

Spring: *red (yellow when wet)*

Shock Limiters: *0*

Camber Link: *2 B*

Shock Locations: *2 inside*

Wing/Wickerbill: *10mm*

Battery Position: *shorty used in rear position*

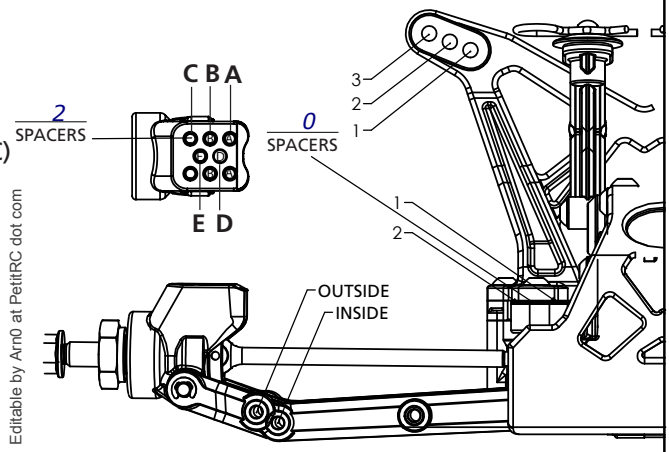

Editable by Arn0 at PetitRC dot com

Electronics

Radio: *dx3r pro*

Servo: *spektrum low*

ESC: *orion v10pro*

Initial Brake:

Drag Brake:

Throttle Profile:

Timing Advance:

Throttle/Brake Expo:

Servo Expo:

Throttle/Brake EPA:

Motor: *6.5 vts*

Pinion: *20* Spur: *76*

Battery: *exelorin*

Weight Placement (Mark with "X")

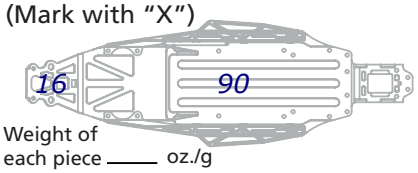

Weight of each piece ____ oz./g

Tires		Compound	Insert	Additive
Front:	*cut stagger lp*	*yellow*	*x*	
Rear:	*minispike 2*	*yellow*	*mro chubbie*	

Notes: *in wet used yellow rear and green front spring down 2.5 weight front and rear total weight 1586 37% front*