TEAM LOSI RACING

22 TWENTY TWO

Name: Lasse Nielsen | Date: 23.05.2011 | Event: Pre-Nordic

City: Odense | State: Fyn, Danmark | Track: www.Odense-Rc.dk

Track Conditions: ☐ Indoor ☑ Outdoor ☐ Tight ☑ Open ☑ Smooth ☐ Rough ☑ Hard Packed ☐ Loose/Loamy ☐ Blue Groove ☑ Dry ☐ Wet ☐ Dusty ☐ Grass ☑ Astro Turf ☐ Low Bite ☐ Med Bite ☑ High Bite ☐ Other

Front Suspension

Toe: 1.5°
Ride Height: 19mm
Camber: -1.5°
Caster: ☐ 0° ☐ 3° ☐ 5° ☑ 10°
Kick Angle: ☐ 20° ☑ 25° ☐ 30°
Sway Bar: None
Oil: 30w
Piston: 54
Spring: Red
Spindle Type: ☐ Inline ☑ Trailing
Shock Limiters: 0
Shock Location: 1 - Middle
Bump Steer: 0
Camber Link: 1

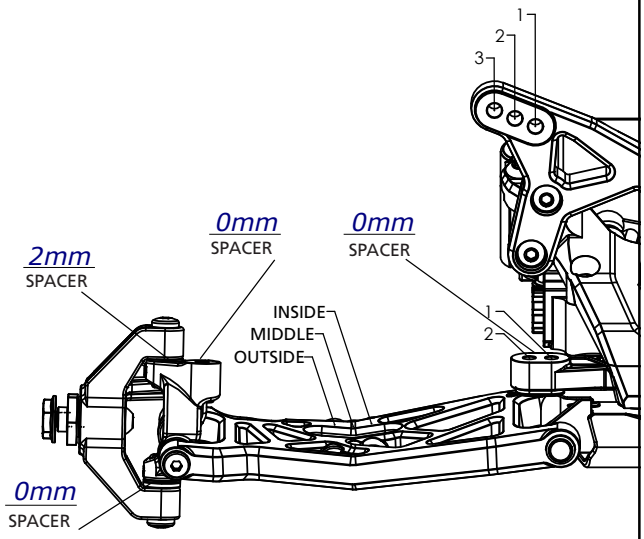

Notes:

Rear Suspension

Chassis Configuration: ☐ Rear Motor ☑ Mid Motor
Toe: 4°
Anti-Squat: 1°
Roll Center: ☑ Low Roll Center (LRC) ☐ High Roll Center (HRC)
Ride Height: Bones level
Camber: -1.5°
Rear Hub Spacing: Mid
Hex Width: Standard
Sway Bar: None
Oil: 27.5w
Piston: 54
Spring: Yellow
Shock Limiters: 0
Camber Link: 2 - B
Shock Locations: 1 - Inside
Wing/Wickerbill: Standard
Battery Position: Forward

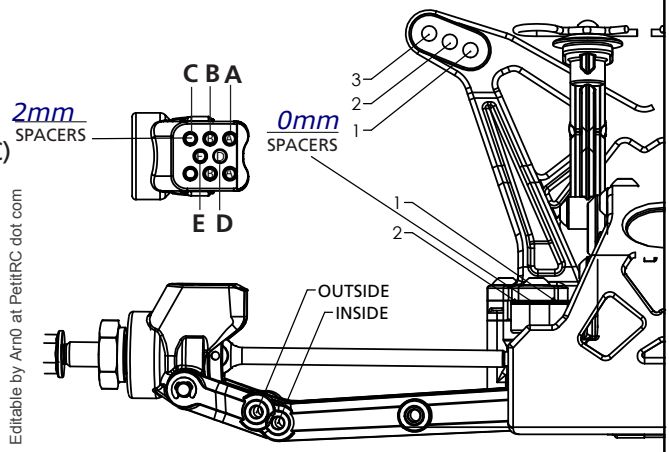

Editable by Arn0 at PetitRC dot com

Electronics

Radio: Sanwa M11x
Servo: SC1251MG
ESC: Tekin RS Pro
Initial Brake: -
Drag Brake: -
Throttle Profile: 3
Timing Advance: 55
Throttle/Brake Expo: 0
Servo Expo: 0
Throttle/Brake EPA: 0
Motor: GM 9.5T
Pinion: 21 Spur: 76
Battery: Xceleron 3800mAh 60C

Weight Placement (Mark with "X")

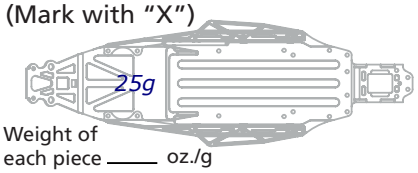

Weight of each piece ____ oz./g

Tires	Compound	Insert	Additive
Front:	Schumacher Cut-Stagger Yellow with	Losi 4wd Yellow insert	
Rear:	Schumacher Mini-Pin Yellow with Losi	Yellow insert	

Notes: 25g is just behind the servo. Fastest laptime: 22,9, 13 laps in 5min 6sek. :-)