TEAM LOSI RACING

22 TWENTY TWO

Name: Kenji Tsuruta

Date: 5/5/2013 Event: Golden Week Off-Road Champs

City: State:

Track: YATABE ARENA

Track Conditions: ☑ Indoor ☐ Outdoor ☐ Tight ☑ Open ☑ Smooth ☐ Rough ☑ Hard Packed ☐ Loose/Loamy ☐ Blue Groove ☑ Dry ☐ Wet ☐ Dusty ☐ Grass ☐ Astro Turf ☐ Low Bite ☑ Med Bite ☑ High Bite ☐ Other

Front Suspension

Toe: 0 Degree

Ride Height: 24mm

Camber: -1.5Degree

Caster: ☐ 0° ☐ 3° ☑ 5° ☐ 10°

Kick Angle: ☐ 20° ☑ 25° ☐ 30°

Sway Bar: NO

Oil: 30wt

Piston: 1.6mmx2

Spring: Red

Spindle Type: ☐ Inline ☑ Trailing

Shock Limiters: 3mm

Shock Location: #2 on Tower, Middle on Arm

Bump Steer: 1mm

Camber Link: 1

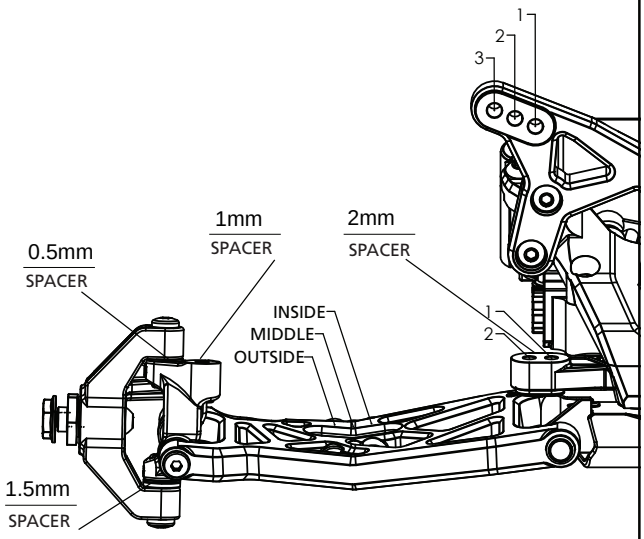

Notes: TLR2059 アルミフロントキャンバーブロック

Rear Suspension

Chassis Configuration: ☑ Rear Motor ☐ Mid Motor

Toe: 3.5 Degree

Anti-Squat: 2.5 Degree

Roll Center: ☑ Low Roll Center (LRC) ☐ High Roll Center (HRC)

Ride Height: 24mm

Camber: -2 Degree

Rear Hub Spacing: Middle

Hex Width: + .75 Mm (TLR2931)

Sway Bar: NO

Oil: 25wt

Piston: 1.6mmx2

Spring: Yellow

Shock Limiters: NO, unscrew eyelet 2 full turns

Camber Link: 1/B

Shock Locations: #2 on tower, inside on Arm

Wing/Wickerbill: Middle

Battery Position: Forward

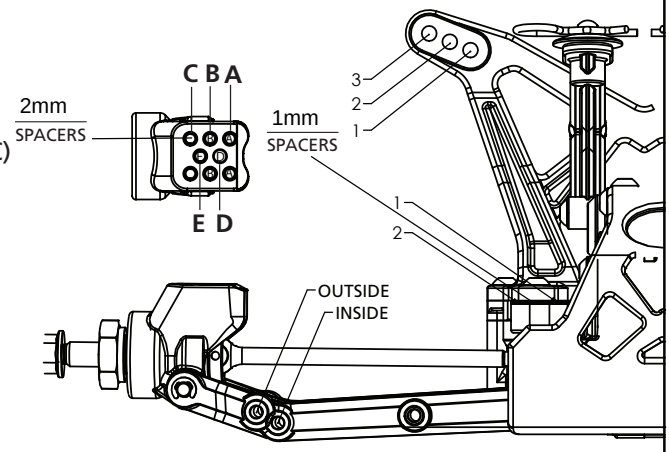

Electronics

Radio: FUTABA 4PKS

Servo: BLS451

ESC: SP Reventon-PRO

Initial Brake:

Drag Brake:

Throttle Profile:

Timing Advance:

Throttle/Brake Expo:

Servo Expo:

Throttle/Brake EPA:

Motor: SP V3.0 7.5T

Pinion: 20 Spur: 78

Battery:

Weight Placement (Mark with "X")

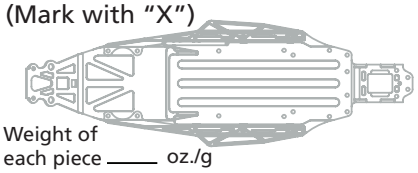

Weight of each piece ____ oz./g

Tires		Compound	Insert	Additive
Front:	Panther	Clay	Normal	
Rear:	Panther	Clay	Closed Cell	

Notes: TLR2060 aluminum rear camber block, TLR334000 breeder shock cap O-ring

TLR5065 breeder aluminum shock cap, TLR5074 low friction shock shaft O-ring