TEAM LOSI RACING

22 TWENTY TWO

Name: John Crawford | Date: 16.07.2011 | Event: Metro Race #2

City: Atlanta | State: QA | Track: HCRCR

Track Conditions: ☐ Indoor ☑ Outdoor ☐ Tight ☐ Open ☐ Smooth ☑ Rough ☑ Hard Packed ☐ Loose/Loamy ☐ Blue Groove ☐ Dry ☐ Wet ☐ Dusty ☐ Grass ☐ Astro Turf ☑ Low Bite ☐ Med Bite ☐ High Bite ☐ Other _____

Front Suspension

Toe: -1°

Ride Height: 24mm

Camber: -1°

Caster: ☐ 0° ☐ 3° ☐ 5° ☑ 10°

Kick Angle: ☑ 20° ☐ 25° ☐ 30°

Sway Bar: _____

Oil: 27.5

Piston: 55

Spring: Orange

Spindle Type: ☐ Inline ☑ Trailing

Shock Limiters: 2mm

Shock Location: 2 - Middle

Bump Steer: 1mm

Camber Link: 1

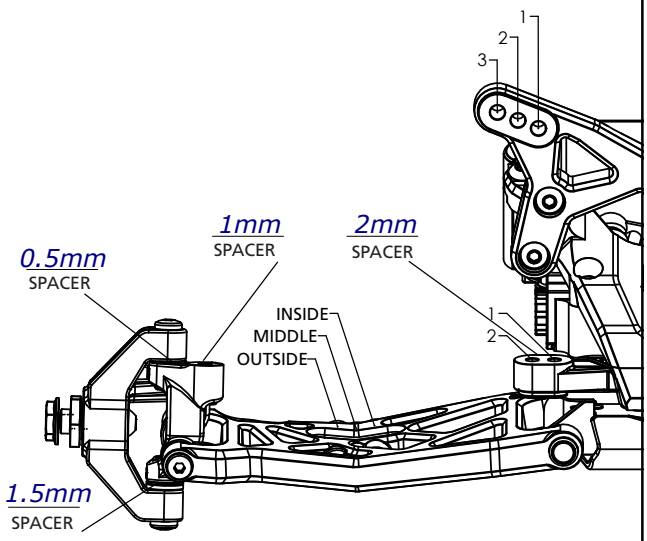

Notes: _____

Rear Suspension

Chassis Configuration: ☑ Rear Motor ☐ Mid Motor

Toe: 4.5°

Anti-Squat: 1°

Roll Center: ☑ Low Roll Center (LRC) ☐ High Roll Center (HRC)

Ride Height: 23mm

Camber: -2°

Rear Hub Spacing: Middle

Hex Width: 0.75mm

Sway Bar: No

Oil: 25

Piston: 55

Spring: White

Shock Limiters: None, unscrewed shock end 2 full turns

Camber Link: 1 - B

Shock Locations: 1 - Inside

Wing/Wickerbill: JConcepts 6.5

Battery Position: Full sizw pack to rear

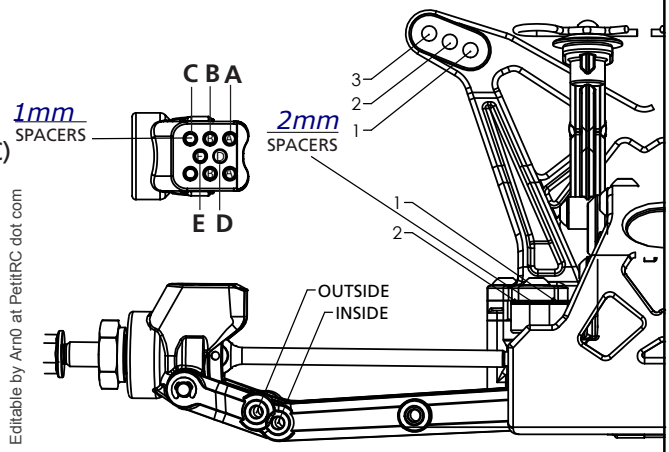

Electronics

Radio: DX3R Pro

Servo: S9551

ESC: Tekin RS

Initial Brake: _____

Drag Brake: _____

Throttle Profile: _____

Timing Advance: 50

Throttle/Brake Expo: _____

Servo Expo: _____

Throttle/Brake EPA: _____

Motor: _____

Pinion: _____ Spur: _____

Battery: Gens Ace 5000mAh 40C

Weight Placement (Mark with "X")

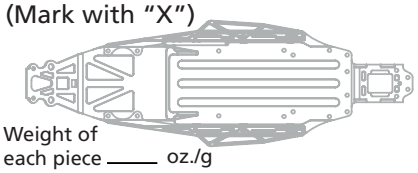

Weight of each piece _____ oz./g

Tires	Compound	Insert	Additive
Front:	JConcepts Rips Green with And1 Inserts		
Rear:	JConcepts Flipout Green with And1 Inserts		

Notes: Cut bladders out of shocks.
Zero weight added to car