TEAM LOSI RACING

22 TWENTY TWO

Name: Franck Picard

Date: 11 - 06 - 2011 Event: Training

City: Zillisheim State: France

Track: Dirt

Track Conditions: ☐ Indoor ☑ Outdoor ☐ Tight ☐ Open ☐ Smooth ☐ Rough ☑ Hard Packed ☐ Loose/Loamy ☐ Blue Groove ☐ Dry ☐ Wet ☐ Dusty ☐ Grass ☐ Astro Turf ☑ Low Bite ☐ Med Bite ☐ High Bite ☐ Other _____

Front Suspension

Toe: 0

Ride Height: 21mm

Camber: -1°

Caster: ☐ 0° ☐ 3° ☐ 5° ☑ 10°

Kick Angle: ☑ 20° ☐ 25° ☐ 30°

Sway Bar: No

Oil: 27.5 or 30

Piston: 54

Spring: Orange

Spindle Type: ☐ Inline ☑ Trailing

Shock Limiters: 2mm

Shock Location: 2 -Middle

Bump Steer: 2mm

Camber Link: 2

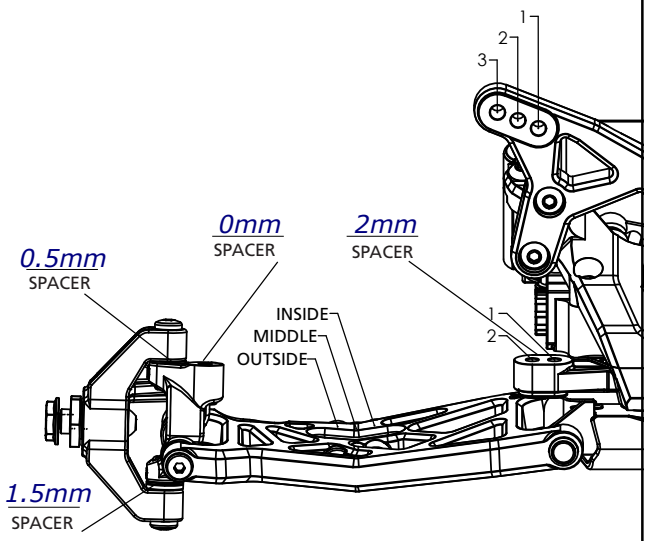

Notes:

Shocks O-Rings TLR5074

Rear Suspension

Chassis Configuration: ☑ Rear Motor ☐ Mid Motor

Toe: 4.5° (TLR2987) or 5° (TLR2988)

Anti-Squat: 2°

Roll Center: ☑ Low Roll Center (LRC) ☐ High Roll Center (HRC)

Ride Height: 22mm

Camber: -1°

Rear Hub Spacing: Middle

Hex Width: 0.75mm TLR Aluminum Rear Hex Set TLR2931

Sway Bar: No

Oil: 25

Piston: 54

Spring: White

Shock Limiters: Unscrew 2 turns = 2 mm

Camber Link: 2 - B

Shock Locations: 2 - Inside

Wing/Wickerbill: Stock

Battery Position: Back

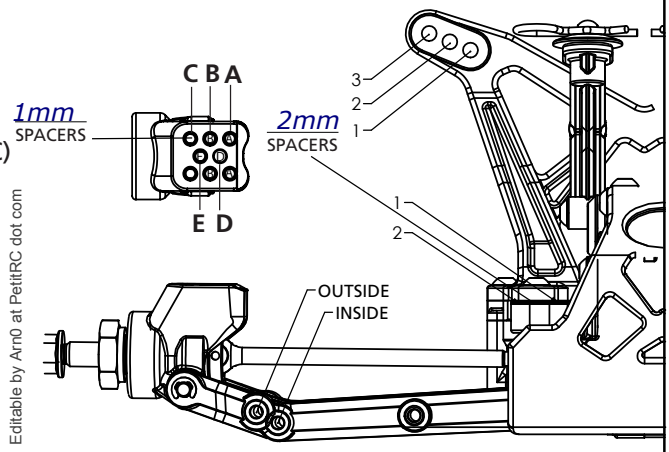

Electronics

Radio: 4pk

Servo: _____

ESC: SP

Initial Brake: _____

Drag Brake: _____

Throttle Profile: _____

Timing Advance: _____

Throttle/Brake Expo: 0

Servo Expo: 0

Throttle/Brake EPA: _____

Motor: SP 10,5 standard

Pinion: 24 Spur: 76

Battery: IP 5200 - 45C sdl

Weight Placement (Mark with "X")

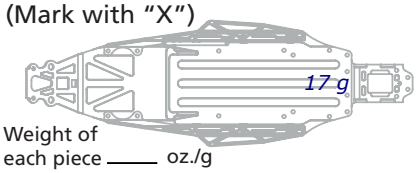

Weight of each piece _____ oz./g

Tires		Compound	Insert	Additive
Front:	Proline 8175	M3	Stock	
Rear:	Proline Caliber	M3	Stock	

Notes: Caliber - Cut edges of foam, mount tire to get higher traction
Diff - balls et thrust bearing Kanzen