TEAM LOSI RACING

22 TWENTY TWO

Name: Thomas Lo

Date: 04.05.2011 Event: French Nationals

City: State:

Track: Pau, Track for the 2011 European Championship

Track Conditions: ☐ Indoor ☑ Outdoor ☐ Tight ☑ Open ☐ Smooth ☐ Rough ☑ Hard Packed ☑ Loose/Loamy ☐ Blue Groove ☐ Dry ☐ Wet ☐ Dusty ☐ Grass ☐ Astro Turf ☑ Low Bite ☐ Med Bite ☐ High Bite ☑ Other Dirt

Front Suspension

Toe: 0°

Ride Height: 22mm

Camber: -1°

Caster: ☐ 0° ☐ 3° ☐ 5° ☑ 10°

Kick Angle: ☑ 20° ☐ 25° ☐ 30°

Sway Bar: No

Oil: 22.5wt

Piston: 55 x 4

Spring: Red

Spindle Type: ☐ Inline ☑ Trailing

Shock Limiters: 2mm

Shock Location: 2 - Middle

Bump Steer:

Camber Link: 2

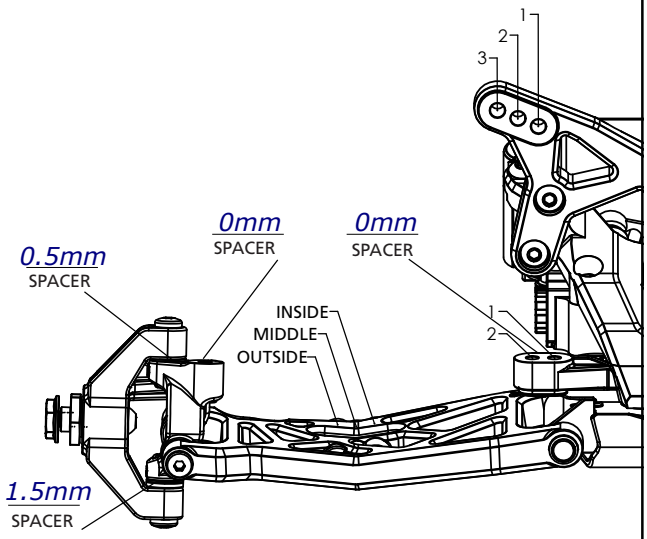

Notes:

Rear Suspension

Chassis Configuration: ☑ Rear Motor ☐ Mid Motor

Toe: 4°

Anti-Squat: 1°

Roll Center: ☑ Low Roll Center (LRC) ☐ High Roll Center (HRC)

Ride Height: 21mm

Camber: -1°

Rear Hub Spacing: Middle

Hex Width: Standard

Sway Bar: No

Oil: 22.5wt

Piston: 54 x 4

Spring: Pink

Shock Limiters: No

Camber Link: 2 - B

Shock Locations: 2 - Outside

Wing/Wickerbill: Standard

Battery Position:

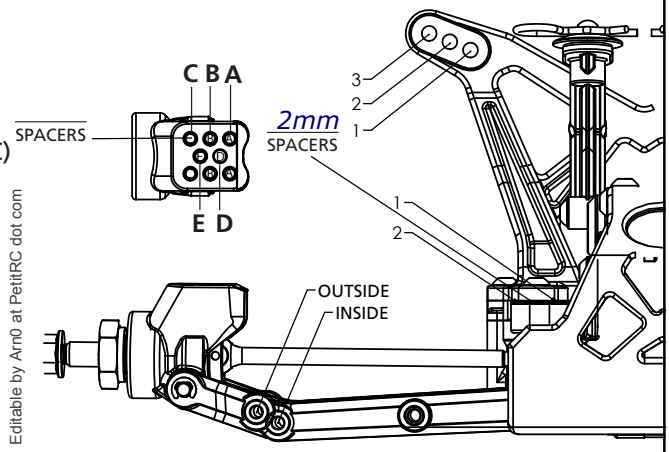

Editable by Arn0 at PetitRC dot com

Electronics

Radio: DX3R Pro

Servo: Savox 1251

ESC: Tekin RS

Initial Brake:

Drag Brake:

Throttle Profile:

Timing Advance:

Throttle/Brake Expo:

Servo Expo:

Throttle/Brake EPA:

Motor: PRT 10.5

Pinion: 25 Spur: 76

Battery: Orion 4600

Weight Placement (Mark with "X")

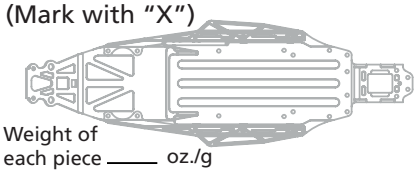

Weight of each piece ____ oz./g

Tires		Compound	Insert	Additive
Front:	Losi	Red		
Rear:	Proline Caliber	M3	Stock	

Notes: