TEAM LOSI RACING

22T TWENTY TWO

Name: Dustin Evans | Date: 12/5/2011 | Event: Spektrum Race

City: | State: | Track: Trackside Hobbies-Brookfield, WI

Track Conditions: ☑ Indoor ☐ Outdoor | ☑ Tight ☐ Open | ☑ Smooth ☐ Rough | ☑ Hard Packed ☐ Loose/Loamy | ☐ Blue Groove ☑ Dry | ☐ Wet ☐ Dusty | ☐ Grass ☐ Astro Turf | ☐ Low Bite ☑ Med Bite | ☐ High Bite ☐ Other

Front Suspension

Toe: 0

Ride Height: 31mm

Camber: -1 degree

Caster: ☐ 0º ☑ 3º ☐ 5º ☐ 10º

Kick Angle: ☐ 20º ☐ 25º ☑ 30º

Sway Bar:

Shock Type: ☐ Bladder ☑ Emulsion Oil: Losi 35 weight

Piston: 55

Spring: Truck Front Green (TLR5182)

Shock Limiters: 4mm

Shock Location: 2/Inside on Arm

Bump Steer: 0

Camber Link: 1

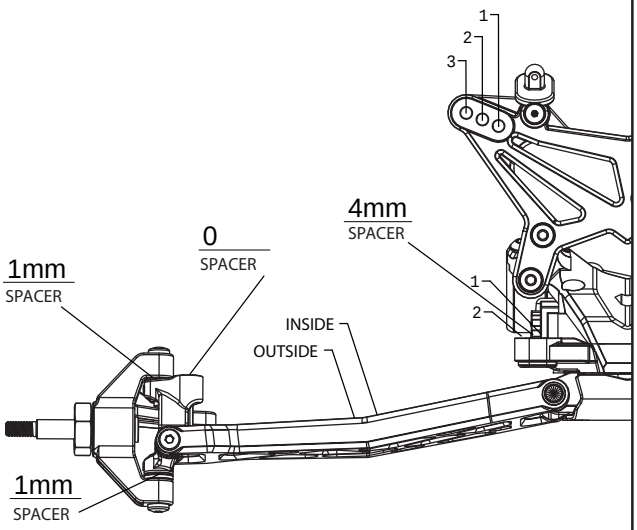

Notes:

Rear Suspension

Chassis Configuration: ☑ Rear Motor ☐ Mid Motor

Differential: ☑ Ball Diff ☐ Gear Diff Gear Diff Fluid:

Toe: 3 Degrees

Anti-Squat: 2 Degrees

Roll Center: ☑ Low Roll Center (LRC) ☐ High Roll Center (HRC)

Ride Height: 29mm

Camber: -1

Rear Hub Spacing: 3mm Back

Hex Width: Stock

Sway Bar:

Shock Type: ☐ Bladder ☑ Emulsion Oil: Losi 32.5 weight

Piston: 55

Spring: Buggy Rear Pink (TLR5168)

Shock Limiters: 0

Camber Link: 1/D

Shock Locations: 2/Inside

Spoiler: Stock

Battery Position: Forward

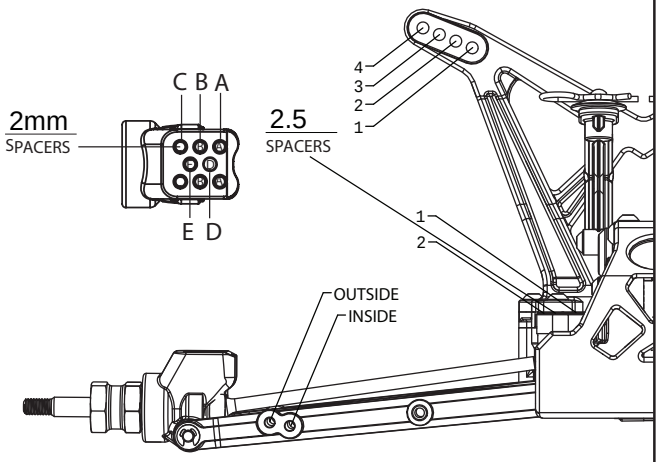

Electronics

Radio: SPM DX3R PRO

Servo: SPM S6040

ESC: Orion Vortex R10

Initial Brake:

Drag Brake:

Throttle Profile:

Timing Advance:

Throttle/Brake Expo:

Servo Expo:

Throttle/Brake EPA:

Motor: Orion 6.5

Pinion: 17 Spur: 82

Battery: Orion 5000mAh

Weight Placement (Mark with "X")

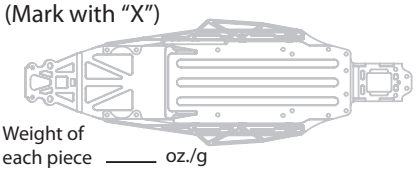

Weight of each piece ____ oz./g

Tires		Compound	Insert	Additive
Front:	Bar Codes	J-Concepts Blue	Stock	
Rear:	Bar Codes	J-Concepts Blue	Closed Cell	

Notes: Aluminum Rear Camber Block (TLR2060)